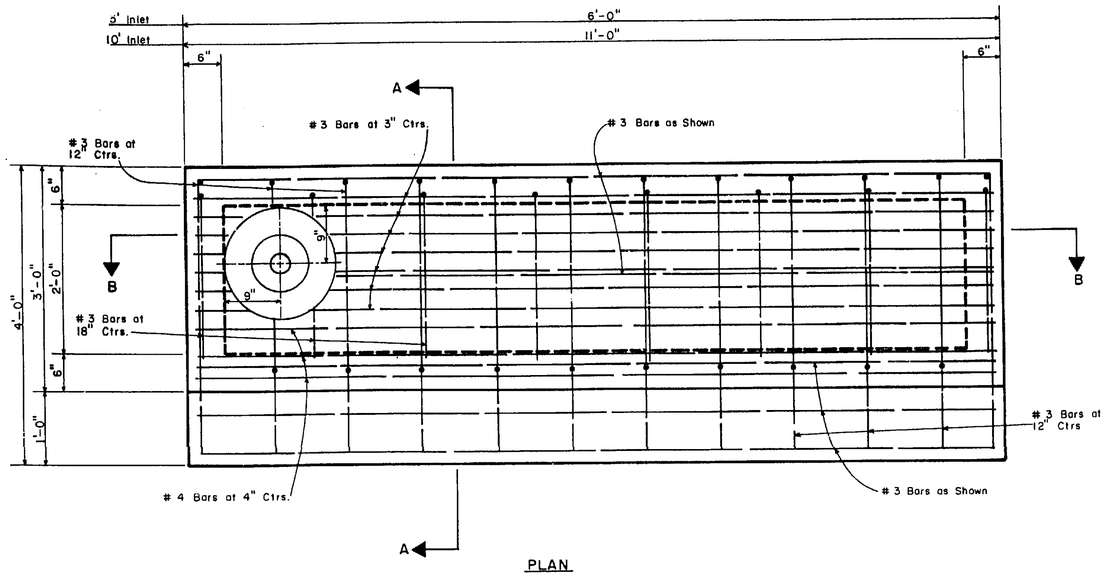

PLAN

PRECAST INLETS

Scale: 1"=1'-0"

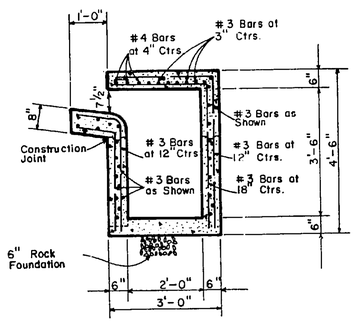

SECTION A–A

Scale: $\frac{1}{2}$" = 1'-0"

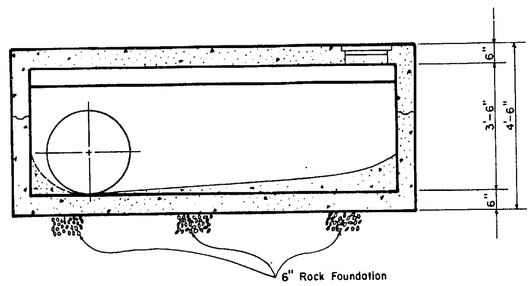

SECTION B–B

Scale: $\frac{1}{2}$" = 1'-0"

1. All inlets shall be equiped with Bass & Hays Model No. 184-L Manhole Cover & Ring, or Approved Equal.

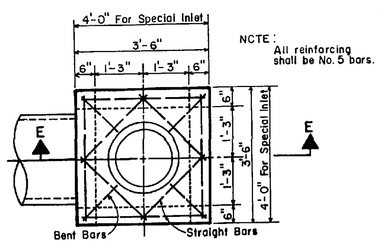

NOTE: All reinforcing shall be No. 5 bars.

PLAN

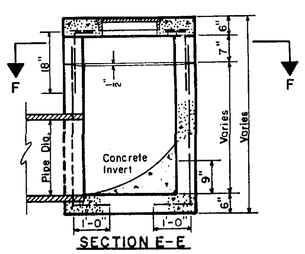

SECTION E-E

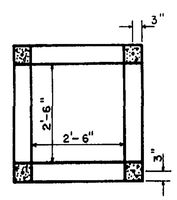

SECTION F-F

STANDARD & SPECIAL TYPE "Y" INLETS

Scale: $\frac{1}{2}$" = 1'-0"

Rev. Sept. '91

SPECIAL INLETS

CITY OF MESQUITE
DEPARTMENT OF COMMUNITY DEVELOPMENT
ENGINEERING DIVISION

STANDARD DETAILS

Design	Drawn	Date	Scale	Notes	File	Sheet
	S.R.K.	April '80	As Noted			___of___